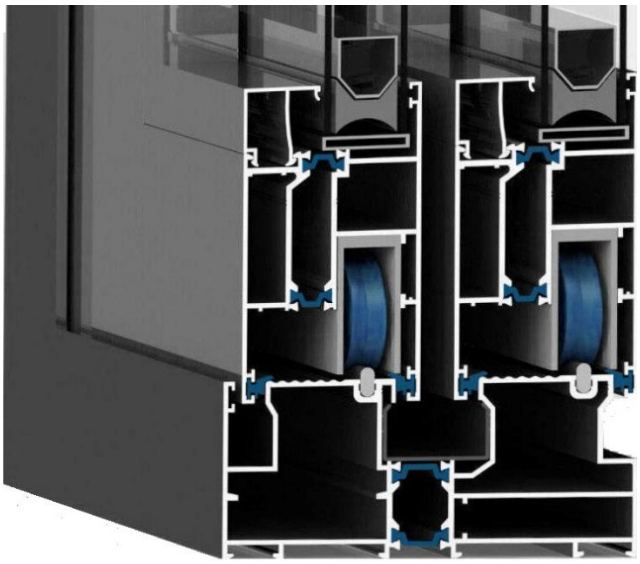

*THERMAL BREAK SLIDING DOOR AND WINDOW SYSTEM*

***Lift & Slide Series***

***NS143T***

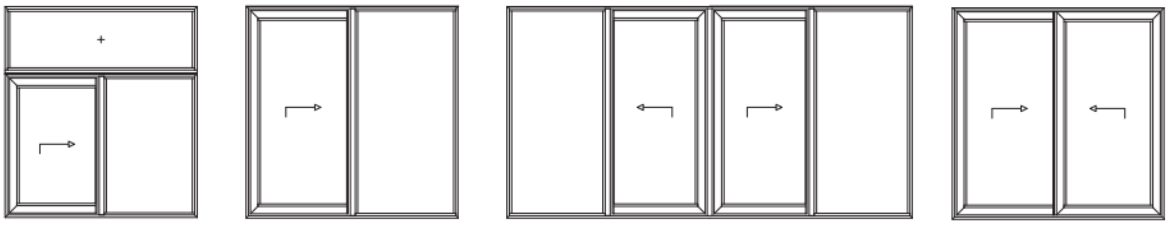

| ***System properties*** | |
|---|---|
| *Frame Width:* | *137-218 mm* |
| *Vent Width:* | *62.5 mm* |
| *Thermal Insulation:* | *14.8-24 mm* |
| *Glass Thickness:* | *18-50 mm* |

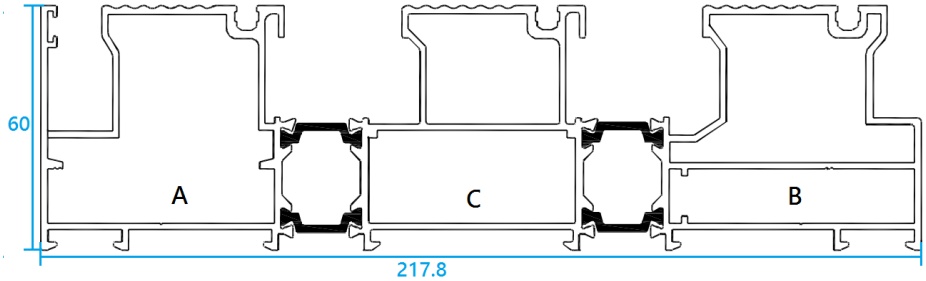


| Profile Name | Weight(kg/m) | Code |
|---|---|---|
| Frame | 5.03 | NS143T-F01 |

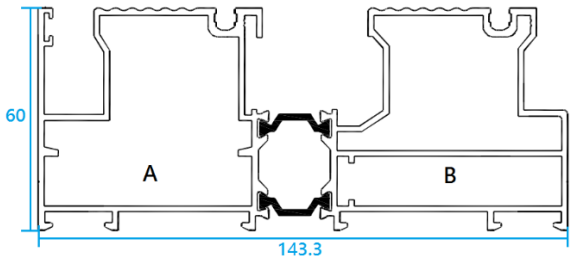


| Profile Name | Weight(kg/m) | Code |
|---|---|---|
| Frame | 3.41 | NS143T-F02 |

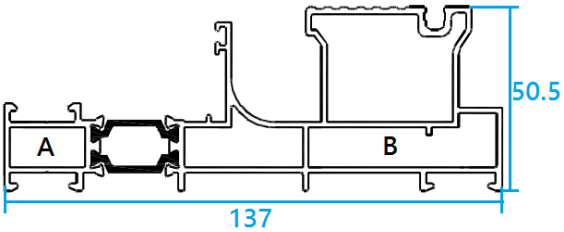


| Profile Name | Weight(kg/m) | Code |
|---|---|---|
| Sliding Fix Frame | 2.52 | NS143T-F03 |

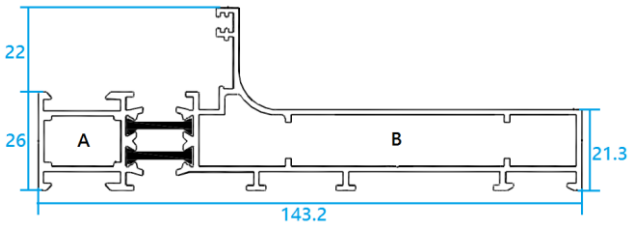


| Profile Name | Weight(kg/m) | Code |
|---|---|---|
| Frame | 1.48 | NS143T-F04 |

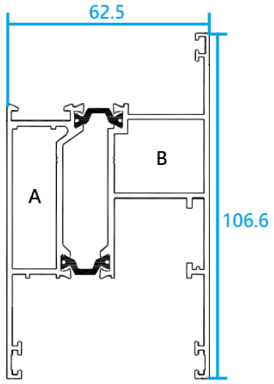


| Profile Name | Weight(kg/m) | Code |
|---|---|---|
| Vent | 2.21 | NS143T-V01 |

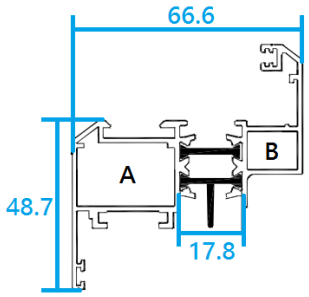


| Profile Name | Weight(kg/m) | Code |
|---|---|---|
| Vent | 1.48 | NS143T-V02 |

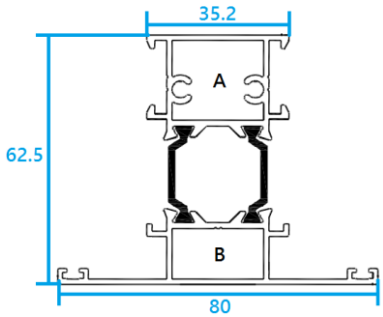


| Profile Name | Weight(kg/m) | Code |
|---|---|---|
| Mullion | 1.48 | NS143T-M01 |

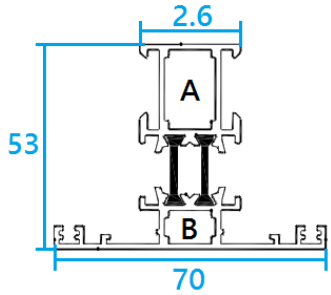


| Profile Name | Weight(kg/m) | Code |
|---|---|---|
| Mullion | 1.36 | NS143T-M02 |

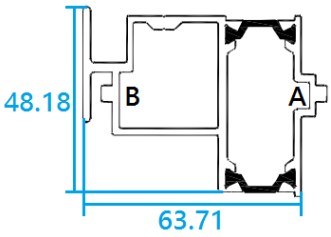


| Profile Name | Weight(kg/m) | Code |
|---|---|---|
| The Middle Four Vent | 1.6 | NS143T-M03 |

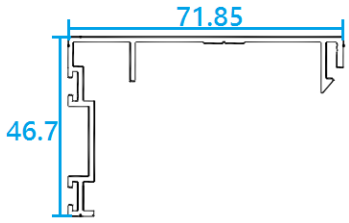


| Profile Name | Weight(kg/m) | Code |
|---|---|---|
| Cap For Vent | 0.7 | NS143T-C01 |

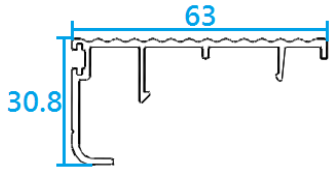


| Profile Name | Weight(kg/m) | Code |
|---|---|---|
| Cover | 0.46 | NS143T-C02 |

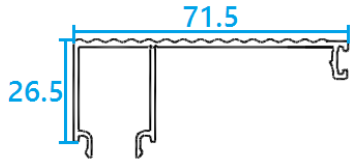


| Profile Name | Weight(kg/m) | Code |
|---|---|---|
| Sliding Fix Cap | 0.6 | NS143T-C03 |

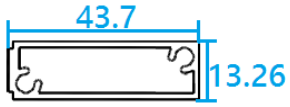


| Profile Name | Weight(kg/m) | Code |
|---|---|---|
| T Profile Piece | 0.51 | NS143T-P01 |

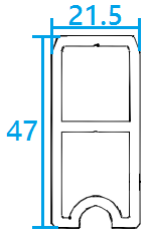


| Profile Name | Weight(kg/m) | Code |
|---|---|---|
| Balancer | 1.05 | NS143T-B01 |

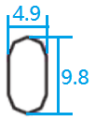


| Profile Name | Weight(kg/m) | Code |
|---|---|---|
| Rail | 1.05 | NS143T-R01 |

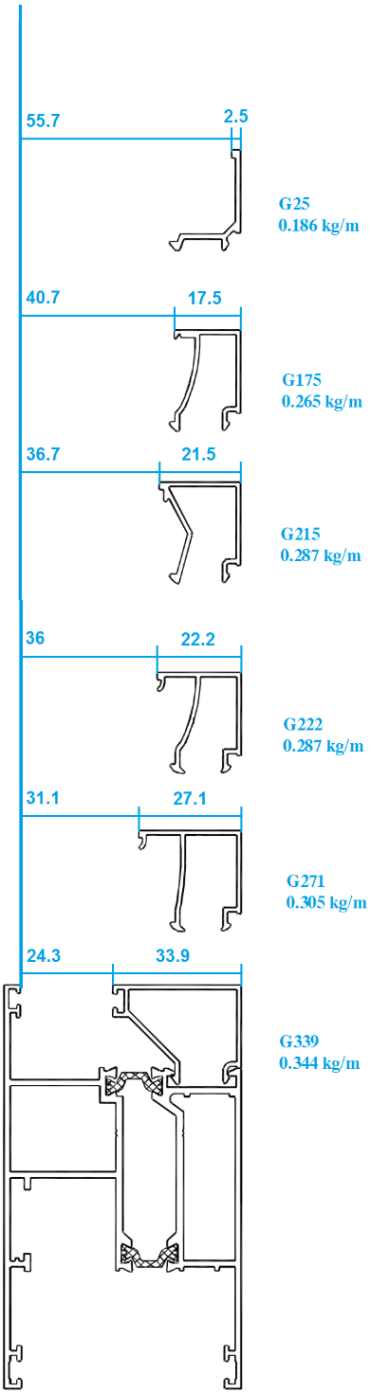
55.7
2.5
G25
0.186 kg/m
40.7
17.5
G175
0.265 kg/m
36.7
21.5
G215
0.287 kg/m
36
22.2
G222
0.287 kg/m
31.1
27.1
G271
0.305 kg/m
24.3
33.9
G339
0.344 kg/m

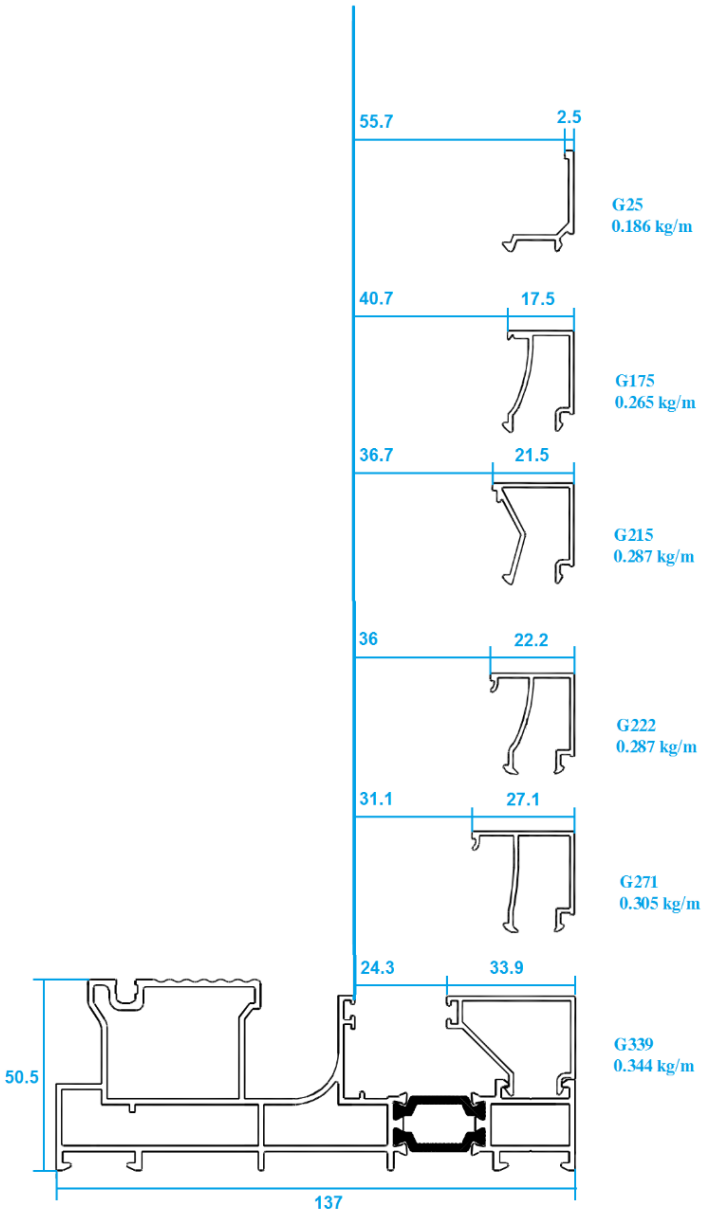
55.7
2.5
G25
0.186 kg/m
40.7
17.5
G175
0.265 kg/m
36.7
21.5
G215
0.287 kg/m
36
22.2
G222
0.287 kg/m
31.1
27.1
G271
0.305 kg/m
24.3
33.9
G339
0.344 kg/m
50.5
137